Work Order ID 101495 *101495* Page 1

May-13-13 1:03:08 PM

Item ID: D2230-3 Accept *N900040100* Setup Start *NS1*

Revision ID: Stop *NS2*

Item Name: Lug

175X Split

Start Date: 5/13/13 **Start Qty:** 300.00 *300*

Required Date: 5/31/13 **Req'd Qty:** 300.00 *300*

Reference:

Cust Item ID:

Customer:

Approvals: **Process Plan:** CL **Date:** 13/05/14 **Tooling:** **Date:** Run Start *NR1*

QC: **Date:** **SPC (Y/N):** **Date:** Stop *NR2*

Sequence ID/ Work Center ID	Operation Description	Set Up/ Run Hours	Tool ID	Tool #	Plan Code	Accept Qty	Reject Qty	Reject Number	Insp. Stamp
Draw Nbr: D2230	Revision Nbr: Rev G								
100	BAND SAW	0.00							
100									
Bandsaw	**Memo**	0.00							
Jeaspa Bandsaw	Cut D2423 extrusion to 0.82" Batch:_____								
	cut @ metec								
						CL	13/05/14	300	
110	HAAS CNC VERTICAL MACHINING #1	0.00							
110									
HAAS 1	**Memo**	0.00							
HAAS CNC vertical machine #1	1-Machine per folio FA927 FOLIO REV:_____ DWG REV:_____ Check for crack while loading into the machine. 2- deburr								
	issue P/O to metec								
	machine as per dwg D2230. REV. G								
						CL	13/05/14	300	

NCR: Yes / No

WORK ORDER NON-CONFORMANCE / UPDATE

DQA: _____ Date: _____

QA Closed: Date:

Work Order: _____

Part No. _____

NCR No. _____

DISPOSITION

Rework ☐
Scrap ☐
Use-as-is ☐
Work Order Update ☐

AGAINST DEPARTMENT/PROCESS

Skid-tube ☐ Crosstube ☐ Water Jet ☐ Engineering ☐
Machining ☐ Small Fab ☐ Prod. Eng. Coor. ☐ Quality ☐
Thermoforming ☐ Finishing ☐ Rec/Store/Packaging ☐ Other ☐
Large Fab ☐ Composite ☐ Supplier ☐ ☐

Root Cause		Date	Step	Qty	Description of work order update or Non-conformance	Initial Chief Eng	Action Description	Sign & Date	Verification	QC Inspector
Doc/Data	☐									
Equip/Tooling	☐									
Operator	☐									
Material	☐									
Setup	☐									
Other	☐									
Process	☐									
Supplier	☐									
Training	☐									
Unapproved	☐									

FAULT CATEGORY

Landing Gear

☐ Bending
☐ Centre Not Concentric to O/S
☐ Cracks
☐ Crushed/Crimped
☐ Cuffs
☐ Heat Treat
☐ Inspection Strip in Tube
☐ Ripples in Bend
☐ Torque Waves in Extrusion
☐ Turning Sequence
☐ Wave/Twist in Tube

General

☐ Bend
☐ BOM/Route
☐ Broken/Damaged
☐ Burrs
☐ Contamination
☐ Countersink
☐ Cut Too Short
☐ Drill Holes
☐ Drawing
☐ Finish
☐ Folio

☐ Grain
☐ Hardware
☐ Inspection Incomplete
☐ Instructions Incomplete/Unclear
☐ Maintenance
☐ Mislabeled
☐ Misread
☐ Offset
☐ Out of Calibration
☐ Out of Sequence
☐ Outside Dimensions

☐ Ovalized
☐ Over/Under tolerance
☐ Part Incorrect
☐ Part Lost/Missing
☐ Part Moved
☐ Positioned Wrong
☐ Power Loss/Surge

☐ Pressure/Forced
☐ Temperature/Cure
☐ Weld
☐ Wrong Stock Pulled

☐ Other

_____
_____
_____

Work Order ID 101495 *101495*

May-13-13 1:03:09 PM

Item ID: D2230-3 **Accept** *N900040100* **Setup Start** *NS1*

Revision ID: **Stop** *NS2*

Item Name: Lug

Start Date: 5/13/13 **Start Qty:** 300.00 *300* **Cust Item ID:**

Required Date: 5/31/13 **Req'd Qty:** 300.00 *300* **Customer:**

Reference:

Run Start *NR1*

Approvals: **Process Plan:** **Date:** **Tooling:** **Date:** **Stop** *NR2*

QC: **Date:** **SPC (Y/N):** **Date:**

Sequence ID/ Work Center ID	Operation Description	Set Up/ Run Hours	Tool ID	Tool #	Plan Code	Accept Qty	Reject Qty	Reject Number	Insp. Stamp
~~120~~ rec'd *120* QC Quality Control	~~QC2- Inspect parts off machine FAI/FAIB~~	0.00					4	3/6/13	175
	Memo rec'd + inspect ~~ftt~~ attached cofc to W/O	0.00							
130 *130* QC Quality Control	QC~~8~~6- Inspect parts - second check	0.00 DAS 27 13 6. 14				179			
	Memo	0.00				cont			
150 *150* HandFinish Hand Finishing	Chemical Conversion Coat per QSI005 4.1	0.00				175		13-6-17	
	Memo	0.00							

DQA: _____ Date: _____

NCR: Yes / No

WORK ORDER NON-CONFORMANCE / UPDATE

QA Closed: Date:

Work Order: _____

Part No. _____

NCR No. _____

DISPOSITION

- Rework ☐
- Scrap ☐
- Use-as-is ☐
- Work Order Update ☐

AGAINST DEPARTMENT/PROCESS

- Skid-tube ☐
- Machining ☐
- Thermoforming ☐
- Large Fab ☐
- Crosstube ☐
- Small Fab ☐
- Finishing ☐
- Composite ☐
- Water Jet ☐
- Prod. Eng. Coor. ☐
- Rec/Store/Packaging ☐
- Supplier ☐
- Engineering ☐
- Quality ☐
- Other ☐

Root Cause		Date	Step	Qty	Description of work order update or Non-conformance	Initial Chief Eng	Action Description	Sign & Date	Verification	QC Inspector
Doc/Data										
Equip/Tooling										
Operator										
Material										
Setup										
Other										
Process										
Supplier										
Training										
Unapproved										

FAULT CATEGORY

Landing Gear

- ☐ Bending
- ☐ Centre Not Concentric to O/S
- ☐ Cracks
- ☐ Crushed/Crimped
- ☐ Cuffs
- ☐ Heat Treat
- ☐ Inspection Strip in Tube
- ☐ Ripples in Bend
- ☐ Torque Waves in Extrusion
- ☐ Turning Sequence
- ☐ Wave/Twist in Tube

General

- ☐ Bend
- ☐ BOM/Route
- ☐ Broken/Damaged
- ☐ Burrs
- ☐ Contamination
- ☐ Countersink
- ☐ Cut Too Short
- ☐ Drill Holes
- ☐ Drawing
- ☐ Finish
- ☐ Folio
- ☐ Grain
- ☐ Hardware
- ☐ Inspection Incomplete
- ☐ Instructions Incomplete/Unclear
- ☐ Maintenance
- ☐ Mislabeled
- ☐ Misread
- ☐ Offset
- ☐ Out of Calibration
- ☐ Out of Sequence
- ☐ Outside Dimensions
- ☐ Ovalized
- ☐ Over/Under tolerance
- ☐ Part Incorrect
- ☐ Part Lost/Missing
- ☐ Part Moved
- ☐ Positioned Wrong
- ☐ Power Loss/Surge
- ☐ Pressure/Forced
- ☐ Temperature/Cure
- ☐ Weld
- ☐ Wrong Stock Pulled
- ☐ Other

_____

_____

_____

Work Order ID 101495 *101495*

May-13-13 1:03:09 PM

Item ID: D2230-3 **Accept** *N900040100* **Setup Start** *NS1*

Revision ID: **Stop** *NS2*

Item Name: Lug

Start Date: 5/13/13 **Start Qty:** 300.00 *300*

Required Date: 5/31/13 **Req'd Qty:** 300.00 *300*

Reference:

Cust Item ID:

Customer:

Run Start *NR1*

Stop *NR2*

Approvals: **Process Plan:** _____ **Date:** _____ **Tooling:** _____ **Date:** _____

QC: _____ **Date:** _____ **SPC (Y/N):** _____ **Date:** _____

Sequence ID/ Work Center ID	Operation Description	Set Up/ Run Hours	Tool ID	Tool #	Plan Code	Accept Qty	Reject Qty	Reject Number	Insp. Stamp
160	QC7-Inspect Chemical Conversion Coat	0.00							
160 QC Quality Control	**Memo**	0.00							
170	White Gloss(Ref:4.3.5.1) per QSI005 4.3-Alum	0.00							
170 Powdercoat Powder Coating	**Memo** START TIME: 8:45 OVEN TEMPERATURE: 320°F FINISH TIME: 9:15	0.00							
180	QC3- Inspect Part Finish	0.00							
180 QC Quality Control	**Memo**	0.00							

175 X ϕ M-F 13/06/21

175 X ϕ M-F 13/06/21

175 ϕ B-6-21

DQA: _____ Date: _____

NCR: Yes / No

WORK ORDER NON-CONFORMANCE / UPDATE

QA Closed: Date:

Work Order: _____

Part No. _____

NCR No. _____

DISPOSITION

- Rework ☐
- Scrap ☐
- Use-as-is ☐
- Work Order Update ☐

AGAINST DEPARTMENT/PROCESS

- Skid-tube ☐
- Machining ☐
- Thermoforming ☐
- Large Fab ☐
- Crosstube ☐
- Small Fab ☐
- Finishing ☐
- Composite ☐
- Water Jet ☐
- Prod. Eng. Coor. ☐
- Rec/Store/Packaging ☐
- Supplier ☐
- Engineering ☐
- Quality ☐
- Other ☐
- ☐

Root Cause		Date	Step	Qty	Description of work order update or Non-conformance	Initial Chief Eng	Action Description	Sign & Date	Verification	QC Inspector
Doc/Data	☐									
Equip/Tooling	☐									
Operator	☐									
Material	☐									
Setup	☐									
Other	☐									
Process	☐									
Supplier	☐									
Training	☐									
Unapproved	☐									

FAULT CATEGORY

Landing Gear

- ☐ Bending
- ☐ Centre Not Concentric to O/S
- ☐ Cracks
- ☐ Crushed/Crimped
- ☐ Cuffs
- ☐ Heat Treat
- ☐ Inspection Strip in Tube
- ☐ Ripples in Bend
- ☐ Torque Waves in Extrusion
- ☐ Turning Sequence
- ☐ Wave/Twist in Tube

General

- ☐ Bend
- ☐ BOM/Route
- ☐ Broken/Damaged
- ☐ Burrs
- ☐ Contamination
- ☐ Countersink
- ☐ Cut Too Short
- ☐ Drill Holes
- ☐ Drawing
- ☐ Finish
- ☐ Folio
- ☐ Grain
- ☐ Hardware
- ☐ Inspection Incomplete
- ☐ Instructions Incomplete/Unclear
- ☐ Maintenance
- ☐ Mislabeled
- ☐ Misread
- ☐ Offset
- ☐ Out of Calibration
- ☐ Out of Sequence
- ☐ Outside Dimensions
- ☐ Ovalized
- ☐ Over/Under tolerance
- ☐ Part Incorrect
- ☐ Part Lost/Missing
- ☐ Part Moved
- ☐ Positioned Wrong
- ☐ Power Loss/Surge
- ☐ Pressure/Forced
- ☐ Temperature/Cure
- ☐ Weld
- ☐ Wrong Stock Pulled
- ☐ Other

_____

_____

_____

Work Order ID 101495

May-13-13 1:03:09 PM

101495

Item ID: D2230-3

Revision ID:

Item Name: Lug

Start Date: 5/13/13 **Start Qty:** 300.00 *300*

Required Date: 5/31/13 **Req'd Qty:** 300.00 *300*

Reference:

Accept *N900040100*

Setup Start *NS1*

Stop *NS2*

Cust Item ID:

Customer:

Run Start *NR1*

Stop *NR2*

Approvals: **Process Plan:** _____ **Date:** _____ **Tooling:** _____ **Date:** _____

QC: _____ **Date:** _____ **SPC (Y/N):** _____ **Date:** _____

Sequence ID/ Work Center ID	Operation Description	Set Up/ Run Hours	Tool ID	Tool #	Plan Code	Accept Qty	Reject Qty	Reject Number	Insp. Stamp
190	Identify as per dwg & Stock Location: ST469	0.00				175x			M.D. 13-06-21
190									
Packaging	**Memo**	0.00							
Packaging									
200	QC21- Final Inspection - Work Order Release	0.00							MLJ 13-06-24
200									
QC	**Memo**	0.00							MLJ 13-06-24
Quality Control									

DQA: _____ Date: _____

NCR: Yes / No

WORK ORDER NON-CONFORMANCE / UPDATE

QA Closed: Date:

Work Order: _____

Part No. _____

NCR No. _____

DISPOSITION

Rework ☐
Scrap ☐
Use-as-is ☐
Work Order Update ☐

AGAINST DEPARTMENT/PROCESS

Skid-tube ☐ Crosstube ☐ Water Jet ☐ Engineering ☐
Machining ☐ Small Fab ☐ Prod. Eng. Coor. ☐ Quality ☐
Thermoforming ☐ Finishing ☐ Rec/Store/Packaging ☐ Other ☐
Large Fab ☐ Composite ☐ Supplier ☐ ☐

Root Cause		Date	Step	Qty	Description of work order update or Non-conformance	Initial Chief Eng	Action Description	Sign & Date	Verification	QC Inspector
Doc/Data	☐									
Equip/Tooling	☐									
Operator	☐									
Material	☐									
Setup	☐									
Other	☐									
Process	☐									
Supplier	☐									
Training	☐									
Unapproved	☐									

FAULT CATEGORY

Landing Gear

☐ Bending
☐ Centre Not Concentric to O/S
☐ Cracks
☐ Crushed/Crimped
☐ Cuffs
☐ Heat Treat
☐ Inspection Strip in Tube
☐ Ripples in Bend
☐ Torque Waves in Extrusion
☐ Turning Sequence
☐ Wave/Twist in Tube

General

☐ Bend
☐ BOM/Route
☐ Broken/Damaged
☐ Burrs
☐ Contamination
☐ Countersink
☐ Cut Too Short
☐ Drill Holes
☐ Drawing
☐ Finish
☐ Folio
☐ Grain
☐ Hardware
☐ Inspection Incomplete
☐ Instructions Incomplete/Unclear
☐ Maintenance
☐ Mislabeled
☐ Misread
☐ Offset
☐ Out of Calibration
☐ Out of Sequence
☐ Outside Dimensions
☐ Ovalized
☐ Over/Under tolerance
☐ Part Incorrect
☐ Part Lost/Missing
☐ Part Moved
☐ Positioned Wrong
☐ Power Loss/Surge
☐ Pressure/Forced
☐ Temperature/Cure
☐ Weld
☐ Wrong Stock Pulled
☐ Other

_____
_____
_____

Picklist Print

May-13-13 1:03:08 PM

Work Order ID: 101495

Parent Item: D2230-3

Parent Item Name: Lug

Start Date: 5/13/13 **Required Date:** 5/31/13

Start Qty: 300.00 **Required Qty:** 300.00

Comments: IPP D00.05.18Added inspection level 8, and removed P/O for powder coatEC IPP REV :E NEW FOLIO # 10-05-25 JLM VERIFIED BY:EC

Component Item ID/ Item Name	Replacement Item ID	Mfg/ Purch	Bin Item	Primary Location	Last Location	Route Seq ID	Unit of Measure	Qty on Hand	Qty per Kit	Total Qty	Qty Issued	Date Issued	Status
D2230-3P LUG		Purchased	No				Each	0.0000		**300**	300	5/13/13	
D2423 Lug Extrusion		Manufactured	No			100	f	588.7400	**0.0683**	**21.56841**	21.57	5/13/13	

Location	Loc Qty	Loc Code
MAT006	383	
43722	161.5	
87953	221.5	
Metec	205.74	
93551	205.74	

DQA: _____ Date: _____

NCR: Yes / No

WORK ORDER NON-CONFORMANCE / UPDATE

QA Closed: Date:

Work Order: _____

Part No. _____

NCR No. _____

DISPOSITION

Rework ☐
Scrap ☐
Use-as-is ☐
Work Order Update ☐

AGAINST DEPARTMENT/PROCESS

Skid-tube ☐ Crosstube ☐ Water Jet ☐ Engineering ☐
Machining ☐ Small Fab ☐ Prod. Eng. Coor. ☐ Quality ☐
Thermoforming ☐ Finishing ☐ Rec/Store/Packaging ☐ Other ☐
Large Fab ☐ Composite ☐ Supplier ☐ ☐

Root Cause		Date	Step	Qty	Description of work order update or Non-conformance	Initial Chief Eng	Action Description	Sign & Date	Verification	QC Inspector
Doc/Data	☐									
Equip/Tooling	☐									
Operator	☐									
Material	☐									
Setup	☐									
Other	☐									
Process	☐									
Supplier	☐									
Training	☐									
Unapproved	☐									

FAULT CATEGORY

Landing Gear

☐ Bending
☐ Centre Not Concentric to O/S
☐ Cracks
☐ Crushed/Crimped
☐ Cuffs
☐ Heat Treat
☐ Inspection Strip in Tube
☐ Ripples in Bend
☐ Torque Waves in Extrusion
☐ Turning Sequence
☐ Wave/Twist in Tube

General

☐ Bend
☐ BOM/Route
☐ Broken/Damaged
☐ Burrs
☐ Contamination
☐ Countersink
☐ Cut Too Short
☐ Drill Holes
☐ Drawing
☐ Finish
☐ Folio
☐ Grain
☐ Hardware
☐ Inspection Incomplete
☐ Instructions Incomplete/Unclear
☐ Maintenance
☐ Mislabeled
☐ Misread
☐ Offset
☐ Out of Calibration
☐ Out of Sequence
☐ Outside Dimensions
☐ Ovalized
☐ Over/Under tolerance
☐ Part Incorrect
☐ Part Lost/Missing
☐ Part Moved
☐ Positioned Wrong
☐ Power Loss/Surge
☐ Pressure/Forced
☐ Temperature/Cure
☐ Weld
☐ Wrong Stock Pulled
☐ Other

_____
_____
_____

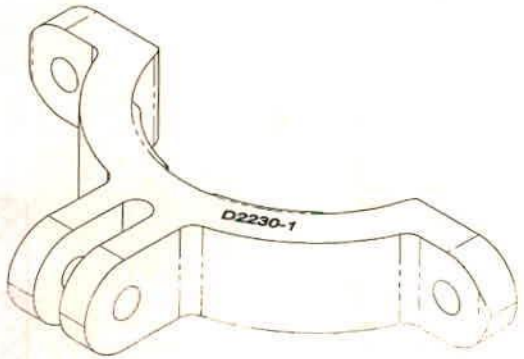

D2230-1 MOUNTING LUG

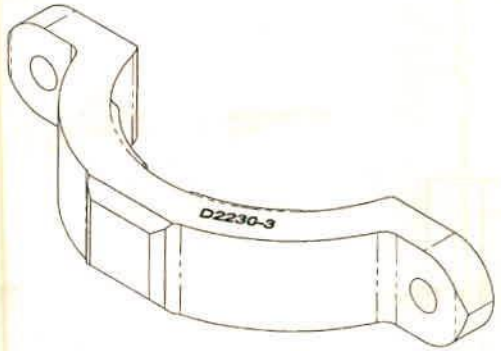

D2230-3 MOUNTING LUG

CL 13/05/14
W/O: 101495

RELEASED 09/06/25 NM

REV.	DESCRIPTION	BY	DATE
G	REDRAWN IN SOLIDWORKS TO CURRENT DESIGN STANDARDS. REFER TO SECTION A-A & B-B FILLET ADDED TO PREVENT CHAFING OF RUBBER CUSHION ON INSTALLATION.	AJS	09.01.16
F	REDESIGN; R1.200 WAS 1.100	CP	99.12.13
E	RE-DESIGN	BW	95.01.04
D	RE-DESIGN	BW	95.01.04
C	RE-DESIGN	BW	94.03.30

DESIGN	BW	**DART AEROSPACE LTD** HAWKESBURY, ONTARIO, CANADA
DRAWN	AJS	
CHECKED		DRAWING NO. D2230 — REV. G — SHEET 1 OF 3
MFG. APPR.		
APPROVED		TITLE MOUNTING LUG — SCALE NTS
DE APPR.		
DATE	09.01.16	

COPYRIGHT © 1994 BY DART AEROSPACE LTD
THIS DOCUMENT IS PRIVATE AND CONFIDENTIAL AND IS SUPPLIED ON THE EXPRESS CONDITION THAT IT IS NOT TO BE USED FOR ANY PURPOSE OR COPIED OR COMMUNICATED TO ANY OTHER PERSON WITHOUT WRITTEN PERMISSION FROM DART AEROSPACE LTD

G

NOTES:
1) MATERIAL: MAKE FROM D2423 EXTRUSION
2) FINISH: CHEMICAL CONVERSION COAT PER DART QSI 005 4.1
POWDER COAT WHITE (4.3.5.1) PER DART QSI 005 4.3
3) TOLERANCES: PER DART QSI 018 UNLESS OTHERWISE NOTED
4) UNITS: INCHES UNLESS OTHERWISE NOTED
5) BREAK SHARP EDGES: 0.005 TO 0.010 MAX
6) IDENTIFICATION: ENGRAVE PART NUMBER TO A DEPTH OF 0.010 ±0.005 IN THIS LOCATION, WITH TOOL TIP RADIUS OF 0.015 ±0.005.
7) WEIGHT: -1: 0.16 lbs
-3: 0.14 lbs

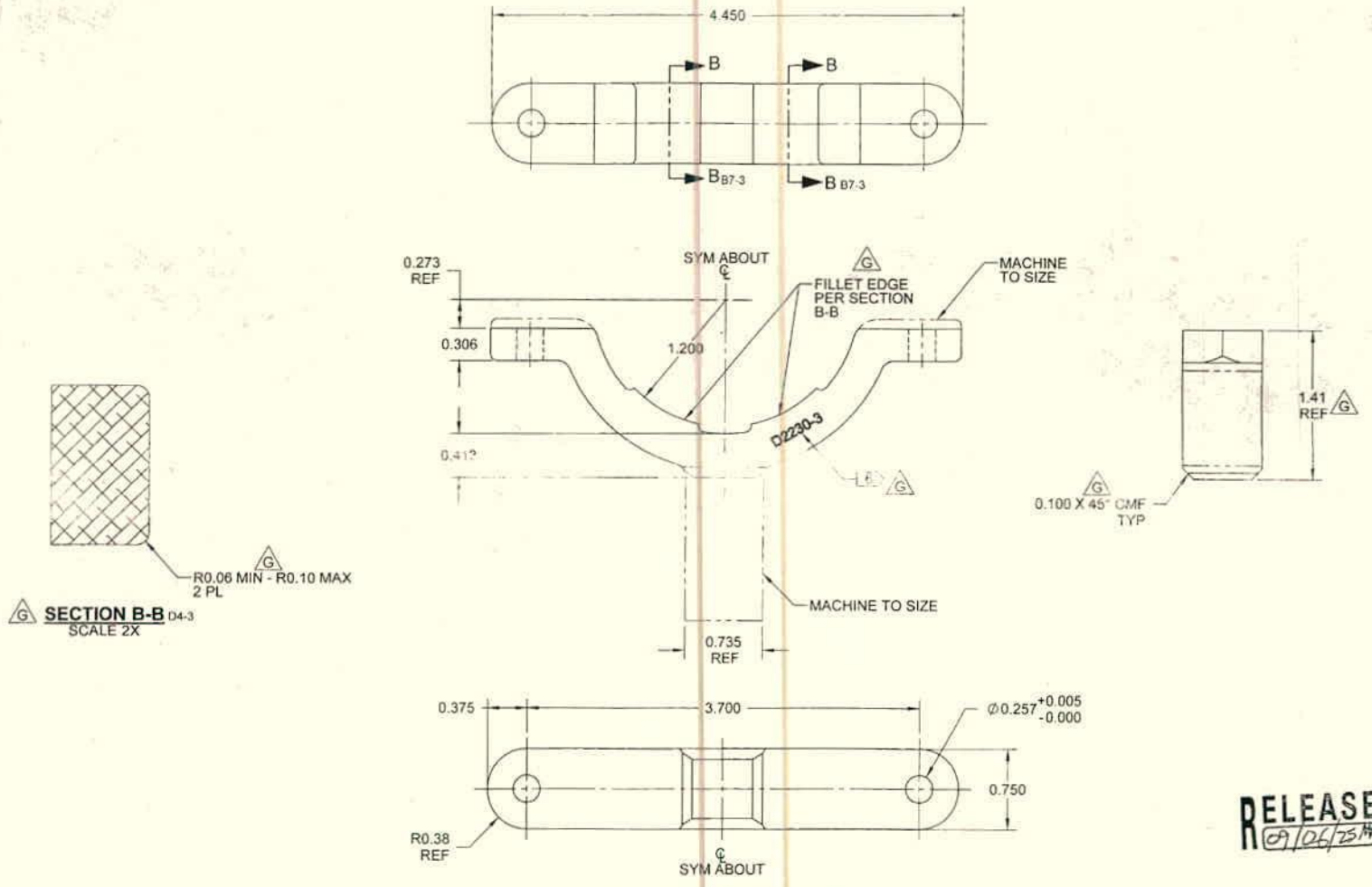

D2230-3 MOUNTING LUG

RELEASED 09/06/23

DESIGN	BW	**DART AEROSPACE LTD**	
DRAWN	AJS	HAWKESBURY, ONTARIO, CANADA	
CHECKED		DRAWING NO. D2230	REV. G
MFG. APPR.			SHEET 3 OF 3
APPROVED		TITLE MOUNTING LUG	SCALE NTS
DE APPR.			
DATE 09.01.16		COPYRIGHT © 1994 BY DART AEROSPACE LTD	

METEC METAL TECHNOLOGY INC.

20 Terry Fox Drive
Vankleek Hill, Ontario K0B 1R0 , Canada
Tel: (613) 678-3957
Fax: (613) 678-3956

Delivery Slip No.: **19056**
Date: Jun 05, 2013
Page: 1

Sold to:	Ship to:
Dart Aerospace Ltd. Att. Linda Lacelle 1270 Aberdeen Street Hawkesbury, Ontario K6A 1K7	Dart Aerospace Ltd. Att. Linda Lacelle 1270 Aberdeen Street Hawkesbury, Ontario K6A 1K7
Order No.: 19868	**Sold By:** Dewar, Eric
Shipped By: ~~our truck~~	**Ship Date:** Jun 06, 2013

	Description	Unit	Ordered quantity	Shipped quantity	Backorder quantity
D2230-3	Mounting Lug as per drawing D2230 REV.G , B101450	Each	300	100	
D2230-3	Mounting Lug as per drawing D2230 REV.G, B101495	Each	300	175	
D2230-1 B101834	Mounting Lug as per drawing D2230-1 REV.G,	Each	320		120
D3235-1 B101559	Mounting Lug as per drawing D3235-1 REV.A,	Each	200		

The delivered goods must be inspected upon receipt to confirm compliance.
Should there be discrepancies please notify METEC within 30 days of delivery.
The goods are otherwise deemed accepted.

Received by Sonia Plouffe

Thank you for your order!

METEC METAL TECHNOLOGY INC.

20 Terry Fox Drive, Vankleek Hill, Ontario K0B 1R0
Tel. (613) 678-3957 & (613) 678-2782 Fax (613) 678-3956 metec@metec.ca

CERTIFICATE OF CONFORMITY

SOLD TO:

Dart Aerospace Ltd.
1270 Aberdeen Street
Hawkesbury, Ont.
K6A 1K7

SHIPPED TO:

same

QUANTITY	PART NUMBER	PART NAME	P.O. NUMBER
275	D2230-3	Lug	PO 19868

MATERIAL: supplied by DART B93551

We hereby certify that the above parts were made in conformance with applicable drawings.

METEC Metal Technology Inc.

Jan Norris

Vankleek Hill, June 6, 2013